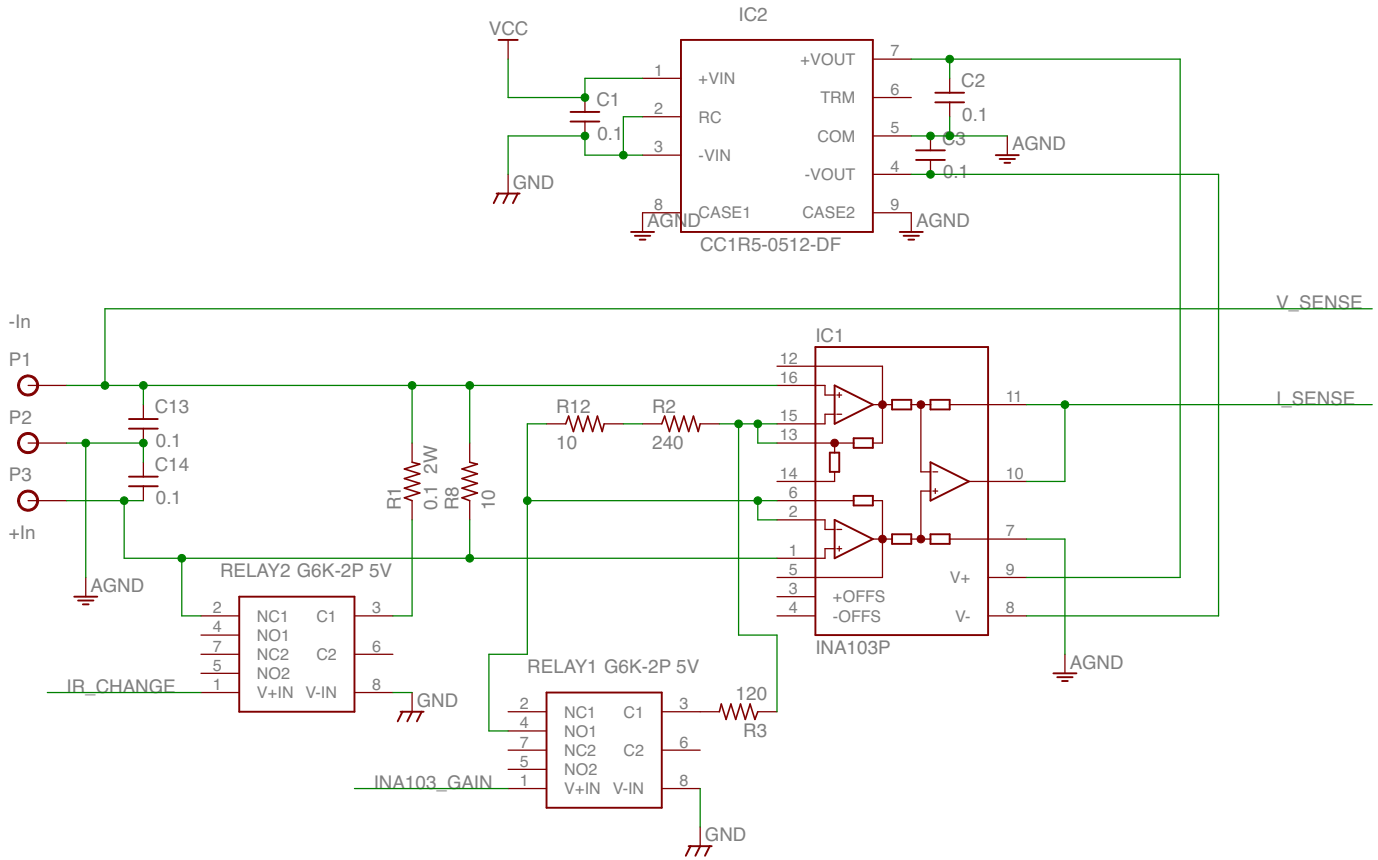
IC2
VCC
+VIN
RC
-VIN
CASE1
+VOUT
TRM
COM
-VOUT
CASE2
C1
0.1
C2
0.1
C3
0.1
GND
AGND
CC1R5-0512-DF
V_SENSE
I_SENSE
-In
P1
P2
P3
+In
C13
0.1
C14
0.1
R1
0.1 2W
R8
10
R12
10
R2
240
IC1
+OFFS
-OFFS
V+
V-
INA103P
RELAY2 G6K-2P 5V
NC1
NO1
NC2
NO2
V+IN
V-IN
C1
C2
IR_CHANGE
RELAY1 G6K-2P 5V
120
R3
INA103_GAIN

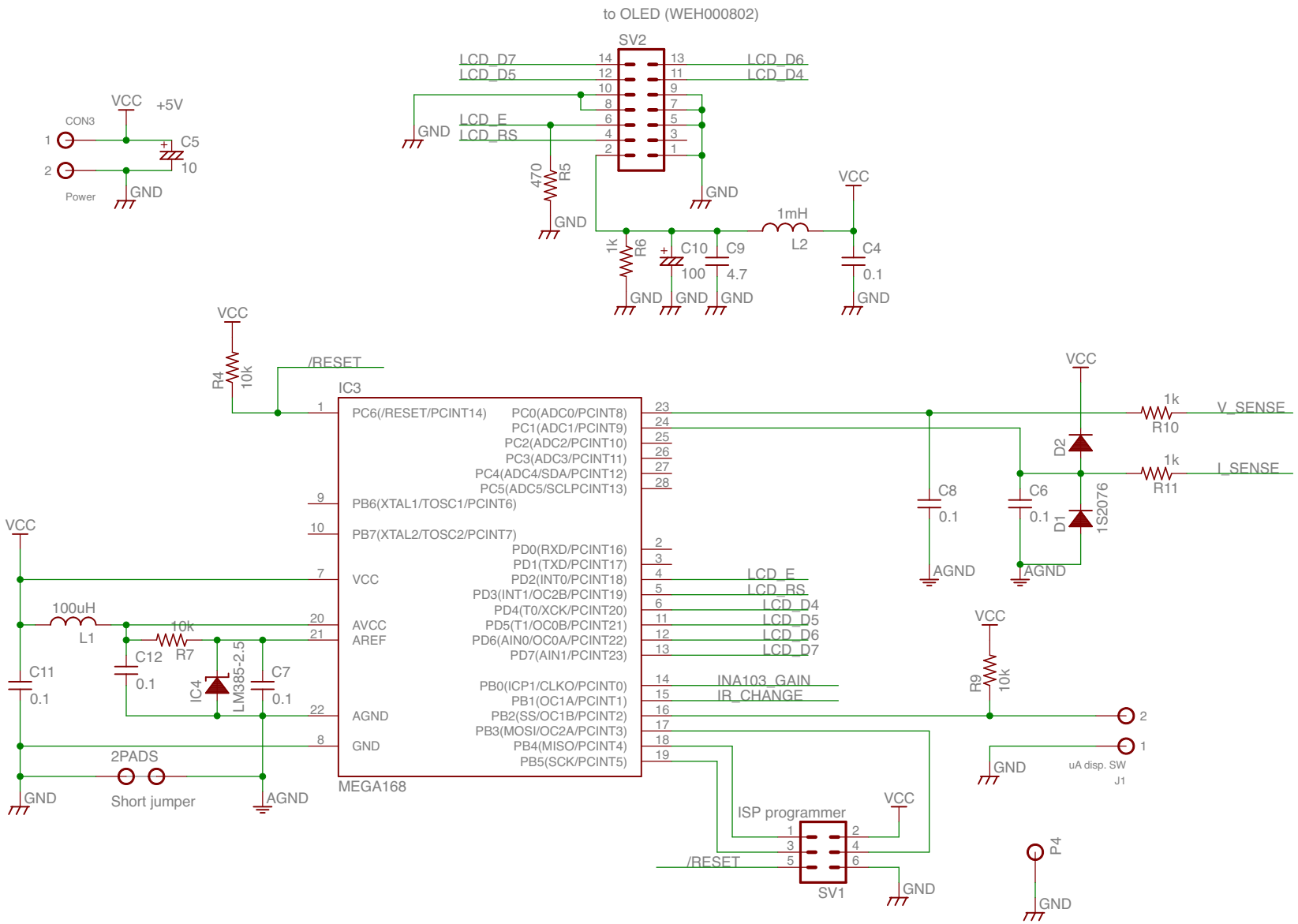
to OLED (WEH000802)
SV2
LCD_D7
LCD_D5
LCD_D6
LCD_D4
LCD_E
LCD_RS
GND
470
R5
1k
R6
C10
100
C9
4.7
1mH
L2
C4
0.1
VCC
CON3
+5V
C5
10
Power
R4
10k
/RESET
IC3
PC6(/RESET/PCINT14)
PC0(ADC0/PCINT8)
PC1(ADC1/PCINT9)
PC2(ADC2/PCINT10)
PC3(ADC3/PCINT11)
PC4(ADC4/SDA/PCINT12)
PC5(ADC5/SCLPCINT13)
PB6(XTAL1/TOSC1/PCINT6)
PB7(XTAL2/TOSC2/PCINT7)
PD0(RXD/PCINT16)
PD1(TXD/PCINT17)
PD2(INT0/PCINT18)
PD3(INT1/OC2B/PCINT19)
PD4(T0/XCK/PCINT20)
PD5(T1/OC0B/PCINT21)
PD6(AIN0/OC0A/PCINT22)
PD7(AIN1/PCINT23)
PB0(ICP1/CLKO/PCINT0)
PB1(OC1A/PCINT1)
PB2(SS/OC1B/PCINT2)
PB3(MOSI/OC2A/PCINT3)
PB4(MISO/PCINT4)
PB5(SCK/PCINT5)
VCC
AVCC
AREF
AGND
GND
MEGA168
INA103_GAIN
IR_CHANGE
V_SENSE
I_SENSE
R10
R11
D2
D1
1S2076
C8
C6
AGND
100uH
L1
10k
R7
C12
C11
IC4
LM385-2.5
C7
2PADS
Short jumper
R9
uA disp. SW
J1
ISP programmer
SV1
P4