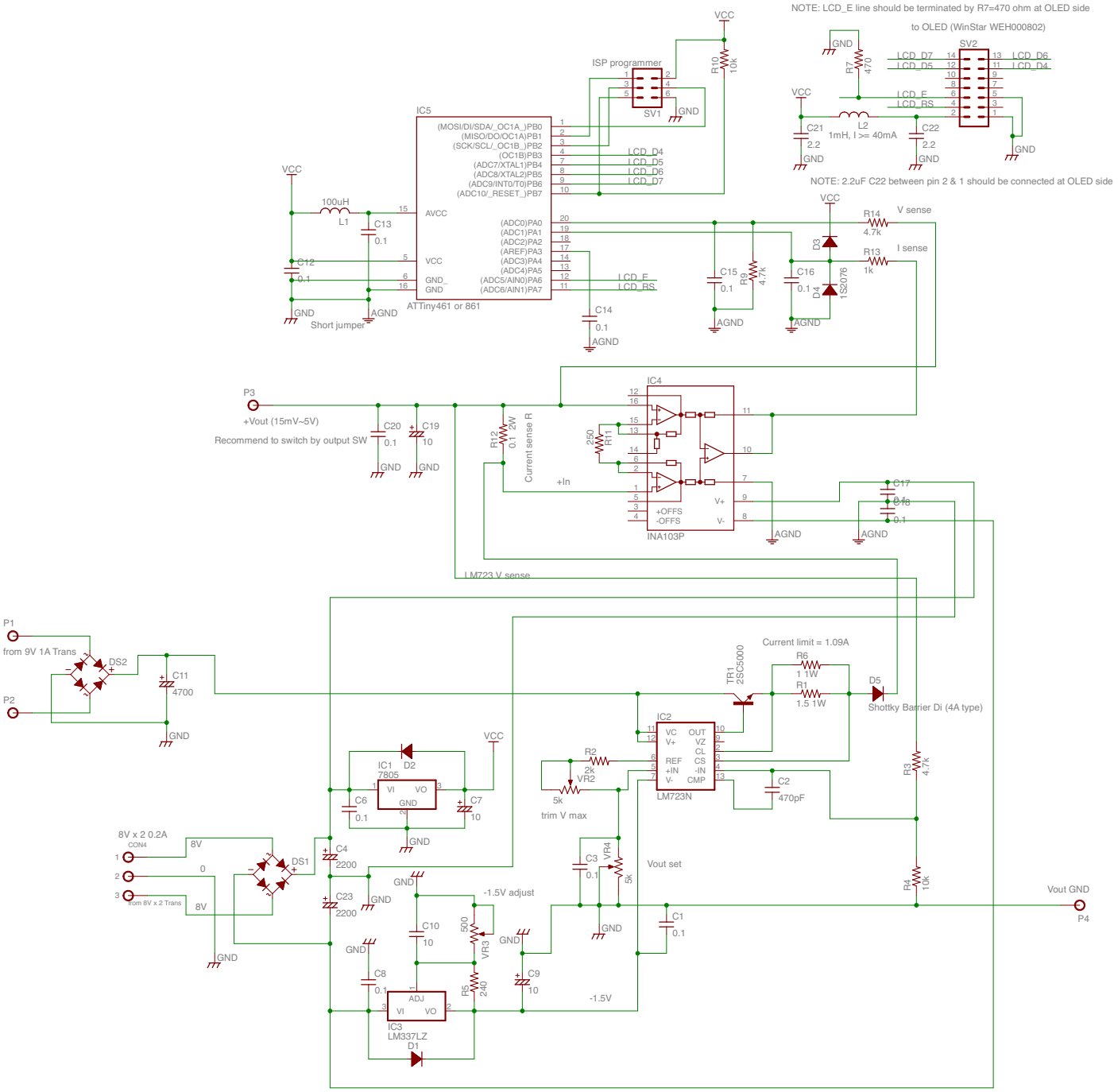
NOTE: LCD_E line should be terminated by R7=470 ohm at OLED side
to OLED (WinStar WEH000802)
SV2
LCD_D7
LCD_D5
LCD_D6
LCD_D4
LCD_E
LCD_RS
R7
470
GND
VCC
C21
2.2
L2
1mH, I >= 40mA
C22
2.2
NOTE: 2.2uF C22 between pin 2 & 1 should be connected at OLED side
ISP programmer
SV1
R10
10k
IC5
(MOSI/DI/SDA/_OC1A_)PB0
(MISO/DO/OC1A)PB1
(SCK/SCL/_OC1B_)PB2
(OC1B)PB3
(ADC7/XTAL1)PB4
(ADC8/XTAL2)PB5
(ADC9/INT0/T0)PB6
(ADC10/_RESET_)PB7
AVCC
VCC
GND_
GND
(ADC0)PA0
(ADC1)PA1
(ADC2)PA2
(AREF)PA3
(ADC3)PA4
(ADC4)PA5
(ADC5/AIN0)PA6
(ADC6/AIN1)PA7
ATTiny461 or 861
100uH
L1
C13
0.1
C12
0.1
AGND
Short jumper
C14
0.1
C15
0.1
R9
4.7k
C16
0.1
D3
D4
1S2076
R14
4.7k
V sense
R13
1k
I sense
P3
+Vout (15mV~5V)
Recommend to switch by output SW
C20
0.1
C19
10
R12
0.1 2W
Current sense R
IC4
INA103P
+In
+OFFS
-OFFS
V+
V-
R11
250
C17
0.1
C18
0.1
LM723 V sense
P1
from 9V 1A Trans
P2
DS2
C11
4700
TR1
2SC5000
Current limit = 1.09A
R6
1 1W
R1
1.5 1W
D5
Shottky Barrier Di (4A type)
IC2
LM723N
VC
V+
REF
+IN
V-
OUT
VZ
CL
CS
-IN
CMP
C2
470pF
R3
4.7k
R4
10k
Vout GND
P4
IC1
7805
D2
VI
VO
C6
0.1
C7
10
R2
2k
VR2
5k
trim V max
8V x 2 0.2A
CON4
from 8V x 2 Trans
8V
0
DS1
C4
2200
C23
2200
C3
0.1
VR4
5k
Vout set
C1
0.1
-1.5V adjust
C10
10
500
VR3
R5
240
C8
0.1
C9
10
-1.5V
IC3
LM337LZ
ADJ
D1